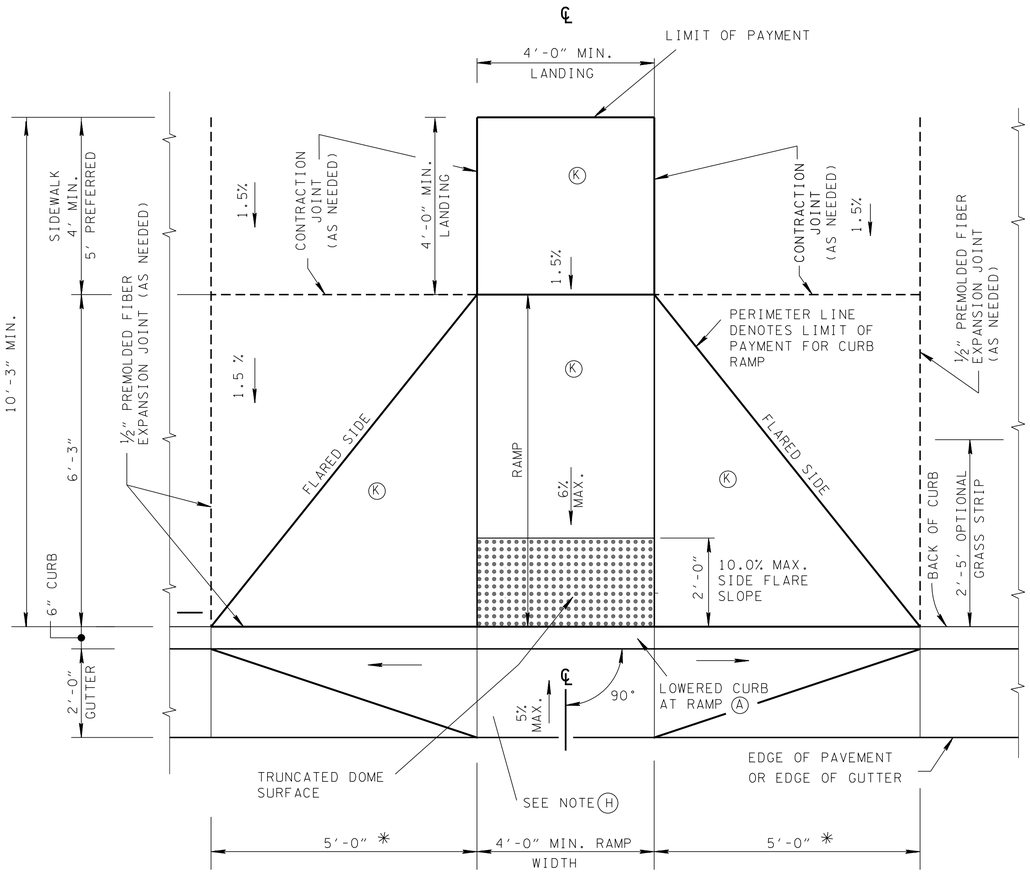

PLAN VIEW

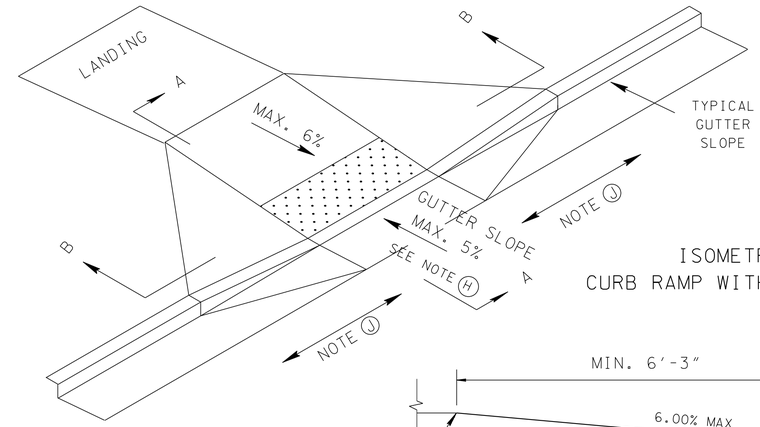

ISOMETRIC VIEW
CURB RAMP WITH GUTTER DETAIL

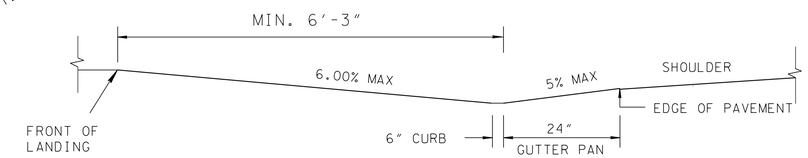

CROSS SECTION A-A
(SHOWN 30" CURB AND GUTTER TRANSITION)
THE GRADE CHANGE ALGEBRAIC DIFFERENCE SHOULD BE LESS THAN 11%

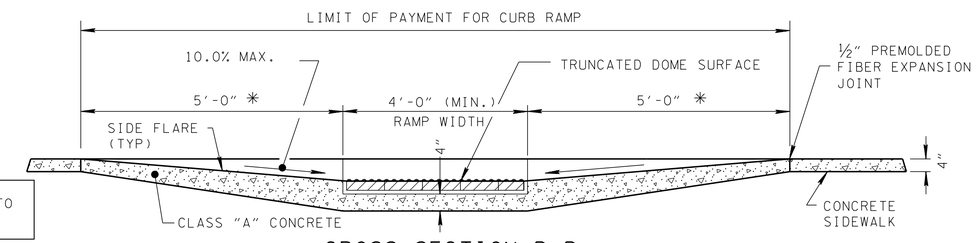

CROSS-SECTION B-B

* DIMENSION VARIES RELATIVE TO LONGITUDINAL ROADWAY GRADE

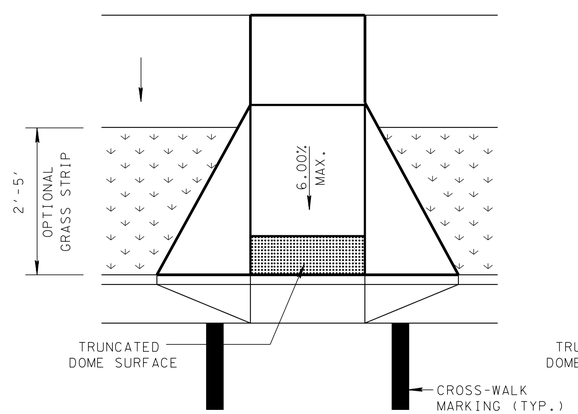

CURB RAMP WITH SIDE FLARES

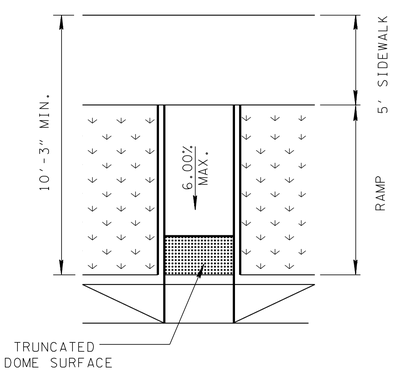

CURB RAMP WITH RETURNED CURB

NOTE TO DESIGNER

PERPENDICULAR CURB RAMPS TO BE USED WHEN TOTAL SIDEWALK OR SIDEWALK AND GRASS STRIP WIDTH IS 10'-3" OR GREATER, SEE RP-H-7 FOR PERPENDICULAR CURB RAMP IN CURVE, AND SEE RP-H-8 FOR PERPENDICULAR CURB RAMP PLACED OUTSIDE CURVE. PERPENDICULAR RAMP WITH 6" VERTICAL CURB SHOWN; OTHERS SIMILAR.

GENERAL NOTE

(A) CURB SHALL BE LOWERED ACROSS ENTIRE WIDTH OF RAMP. THE FIRST TWO FEET OF RAMP MUST CONSIST OF A TRUNCATED DOME SURFACE. RAMPS SHALL INCLUDE THE TRUNCATED DOME SURFACE TO PROVIDE A DETECTABLE WARNING FOR VISUALLY IMPAIRED PEDESTRIANS. SEE RP-H-3 FOR TRUNCATED DOME SURFACE DETAILS.

(B) DESIGN/CONSTRUCTION MODIFICATIONS MAY BE REQUIRED FOR CURB RAMPS TO BE INSTALLED ALONG A ROADWAY WITH LONGITUDINAL GRADES EXCEEDING 5%. ENGINEER SHOULD BE NOTIFIED FOR ASSESMENT IF THE CURB RAMP SIDE FLARES EXCEED 10' IN LENGTH DUE TO THE LONGITUDINAL GRADE.

(C) PAYMENT:

COST OF THE LOWERED CURB AND GUTTER TO BE INCLUDED IN THE PRICE OF ITEM NO. 702-01, CONCRETE CURB OR ITEM NO. 702-03, CONCRETE COMBINED CURB & GUTTER.

ALL COSTS OF INSTALLING CURB RAMP(S), INCLUDING TRUNCATED DOME SURFACE(S) IN EXISTING SIDEWALK AREAS, REMOVAL OF THE EXISTING SIDEWALK, AND ADJUSTMENT OF GUTTER PAN SLOPE, SHALL BE BID FOR UNDER THE FOLLOWING PAY ITEM:

701-02.01 CONCRETE CURB RAMP (RETROFIT) PER SQUARE FOOT.

PAYMENT SHALL INCLUDE ALL MATERIALS, EQUIPMENT, AND LABOR NECESSARY FOR CONSTRUCTION OF THE CURB RAMP(S), INCLUDING INSTALLATION OF TRUNCATED DOME SURFACE(S).

ALL COSTS OF INSTALLING CURB RAMP(S), INCLUDING TRUNCATED DOME SURFACE(S) IN NEWLY CONSTRUCTED SIDEWALK AREAS, SHALL BE BID FOR UNDER THE FOLLOWING PAY ITEM:

701-02.03 CONCRETE CURB RAMP PER SQUARE FOOT.

PAYMENT SHALL INCLUDE ALL MATERIALS, EQUIPMENT, AND LABOR NECESSARY FOR CONSTRUCTION OF THE CURB RAMP(S), INCLUDING INSTALLATION OF TRUNCATED DOME SURFACE(S).

(D) FOR SIGNALIZED INTERSECTIONS THAT REQUIRE PEDESTRIAN SIGNAL PUSHBUTTONS, SEE TDOT TRAFFIC DESIGN MANUAL FOR DETAILS.

(E) IF MAILBOXES ARE REMOVED DURING INSTALLATION OF THE RAMP, PROVIDE A 12" X 12" OPENING BEHIND THE CURB. SEE RP-S-7.

(F) IF GRASS STRIP IS LARGER THAN 6', THE SIDE FLARES MAY BE OMITTED AND A RETURNED CURB OPTION MAY BE USED.

(G) DESIRABLE SIDEWALK CROSS SLOPE IS 1.5 %, ABSOLUTE MAXIMUM IS 2 %.

(H) THE GUTTER LONGITUDINAL SLOPE SHALL MATCH THE ROADWAY AT THE RAMP, AND THE GUTTER CROSS SLOPE AT THE RAMP SHALL NOT EXCEED 5%.

(I) DESIGN THE RAMP AND GUTTER WITH A CROSS SLOPE OF MAX. 2.0 %.

(J) TRANSITION GUTTER CROSS SLOPE FROM NORMAL SLOPE TO 5%, SIMILAR TO SUPERELEVATION TRANSITION AREAS. MATCH GUTTER TRANSITION TO RAMP FLARES FOR PERPENDICULAR (TYPICAL 5') OR RAMP AREA FOR PARALLEL (TYPICAL 6')

(K) SURFACE TEXTURE TO BE OBTAINED BY A COARSE BROOMING TRANSVERSE TO THE SLOPE OF RAMP.

(L) SEE T-M-4 FOR CROSS-WALK MARKING DETAILS.

- REV. 4-13-11: ADDED CURB NOTE AND REVISED RAMP DIMENSION IN SECTION A-A. ADDED FOOTNOTE (I). MISC. EDITS TO DRAWING.
- REV. 1-15-13: ADDED GENERAL NOTES. REVISED RAMP LENGTH.
- REV. 6-4-13: CORRECTED SECTION A-A. CHANGED CROSS SLOPE TO 1.5 % DESIRABLE. ADDED NOTES (H) AND (I). CHANGED ITEM DESCRIPTION.

  REV. 1-30-15: UPDATED NOTES, REMOVED PAVERS. VARIOUS DRAFTING EDITS.
- REV. 10-10-16: REVISED GENERAL NOTES, MISC. REVISIONS TO DETAILS.

☐ MINOR REVISION -- FHWA APPROVAL NOT REQUIRED.

STATE OF TENNESSEE
DEPARTMENT OF TRANSPORTATION

PERPENDICULAR CURB RAMP

1-15-07 | RP-H-4

1/15/2016 9:21:26 AM
C:\Standard Drawings\DGN to PDF\RP-H-4_101016.DGN